| Dimension Drawing - LiFePO4 (NG) | |
|---|---|
| BAT524130620 | LiFePO4 Battery 25,6V/300Ah NG |

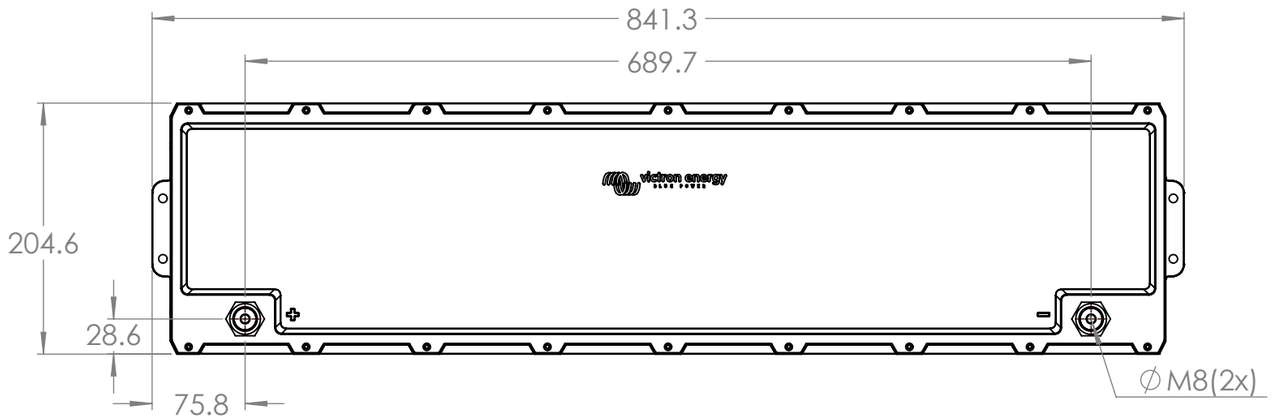


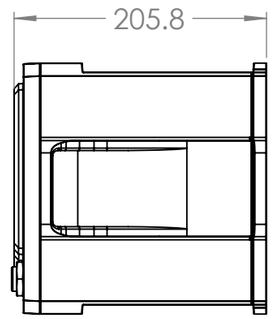


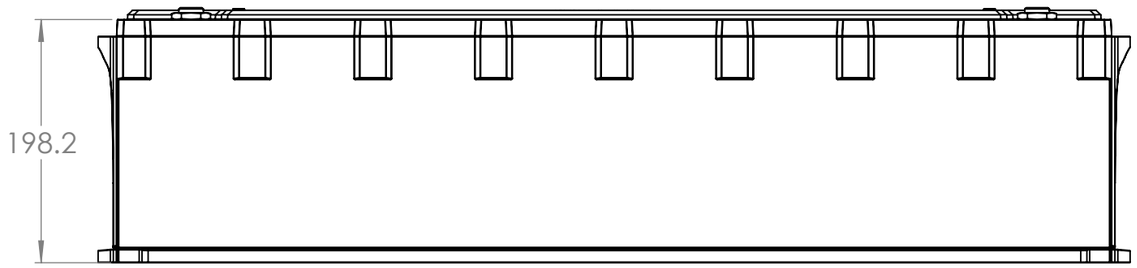


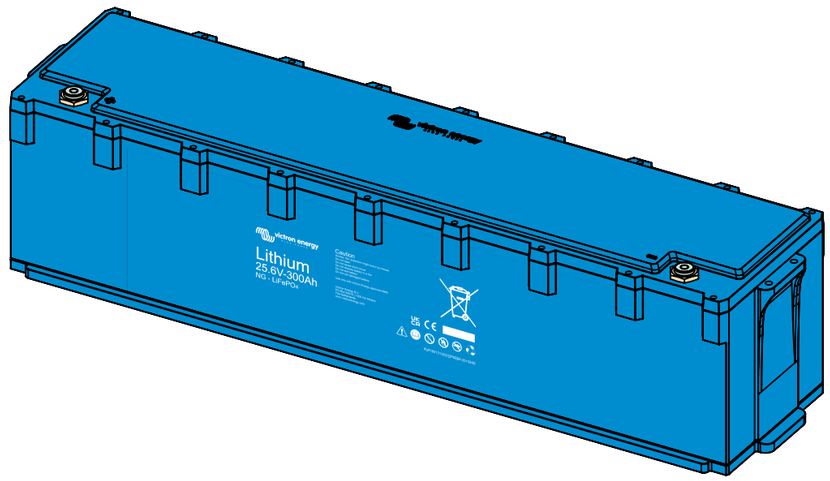


Dimensions in mm

victron energy
BLUE POWER

Rev01